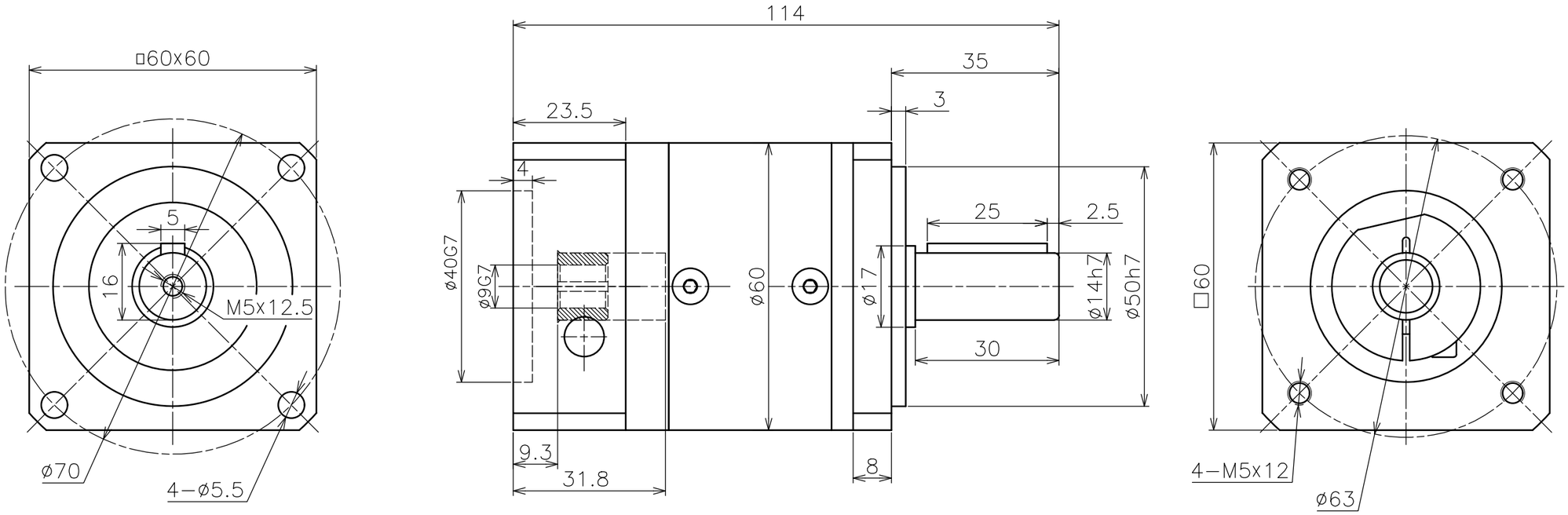

Reduction ratio	10:1	Degree of protection	IP54
Lifetime	20000h	Moment of inertia	0.054Kgcm^2
Nominal output torque	13N·m	Standard Backslash	≤8arcmin
Emergency stop torque	26N·m	Noise	≤58dB (1m)
Permitted radial load	400N	Input speed	3000rpm
Permitted axial load	500N	Environment	−25°C~+90°C

GREENLAB

PF60
Planetary Gear

1:1

6.0011 PF60-10-P2S2OP1-19x30-40-63M5